Walker, Michigan, U.S.A. 49534

USER S OPERATING AND INSTRUCTION MANUAL

MODEL 600-R3 SERIES

DOUGH MOULDERS

600-R3S20000-CV

THIS PAGE WAS INTENTIONALLY
LEFT BLANK.

Oliver Packaging and Equipment Company (800) 253-3893
3236 Wilson DR NW Walker, MI 49534 www.oliverquality.com

SAFETY INSTRUCTIONS

Various safety devices and methods of guarding have been provided on this machine. It is essential, however, that machine operators and maintenance personnel observe the following safety precautions. Improper installation or operation of this equipment may cause injury to personnel or damage to equipment.

1. Read this manual before attempting to operate your machine. Never allow an untrained person to operate or service this machine.

2. Connect the machine to a properly grounded electrical supply that matches the requirements shown on the electrical specification plate and follow specifications of local electrical codes.

3. Disconnect and lock-out the machine from the power supply before cleaning or servicing.

4. Check and secure all guards before starting the machine.

5. Observe all caution and warning labels affixed to the machine.

6. Use only proper replacement parts.

7. Do not wear loose fitting clothing or loose hair. Shirt tails should be tucked in.

8. Wear proper personal safety equipment.

9. Keep Hands away form the moving parts of this machine while it is in operation.

10. In addition to these general safety instructions, also follow the more specific safety instructions given for the different areas of the machine in the operating instructions.

WARNING

DO NOT USE FOR OTHER THAN ORIGINALLY INTENDED PURPOSE

MODEL 600-R3 SERIES DOUGH MOULDERS

INDEX

SECTION NO. **PAGE**

1.0 DESCRIPTION/SPECIFICATIONS..... 1-1
- 1-1 Description
- 1-2 Dimensional Specifications
- 1-3 Electrical Specifications
- 1-4 Wiring Diagram

2.0 MACHINE INSTALLATION..... 2-1
- 2-1 Electrical Requirements
- 2-2 Machine Running Direction

3.0 OPERATING INSTRUCTIONS..... 3-1
- 3-1 Machine Preparation
- 3-2 Establishing Settings

4.0 CLEANING/MAINTENANCE..... 4-1
- 4-1 Cleaning
- 4-2 Changing the Felt under the Heavy Mat
- 4-3 Changing the V-belt
- 4-4 Replacing the Motor
- 4-5 Removing Rear Chamber Assembly and Belt
- 4-6 Removing the Sheeting Rollers
  - 4-6-1 Removing the Upper Sheeting Roller
  - 4-6-2 Moving the Lower Sheet Roller
- 4-7 Replacing the Front Triangular Belt
  - 4-7-1 Moving the Front Triangular Belt
  - 4-7-2 Installing the Front Triangular Belt

5.0 REPLACEMENT PARTS..... 5-1
- 5-1 Assembly Drawings
- 5-4 Parts List

WARRANTY.....

WARRANTY PROCEDURE

THIS PAGE WAS INTENTIONALLY
LEFT BLANK.

Oliver Packaging and Equipment Company (800) 253-3893
3236 Wilson DR NW Walker, MI 49534 www.oliverquality.com

MODEL 600-R3 SERIES DOUGH MOULDER

1.0 DESCRIPTION / SPECIFICATION

1.1 Description

The moulder stretches dough gently and gradually between two belts revolving in opposite directions and at different speeds. The dough is inserted in a hopper located approximately 54" from the floor (when mounted on the Oliver Moulder stand with casters), which feeds it between three plastic coated sheeting rollers. The sheeting and stretching operations are controlled manually with two levers with easy to read scales.

The moulded dough is delivered below the hopper on a felt covered retractable shelf approximately 32" above the floor (when mounted on the Oliver Moulder stand with casters).

All driving cylinders are mounted on sealed bearings which are lubricated at the factory and need no further lubrication. The front belt rotates on three cylinders positioned in a triangular pattern while the rear belt rotates in the opposite direction on two cylinders. The three plastic coated sheeting rollers, (of which the lower one is adjustable), flatten the dough after it is inserted in the hopper.

The moulder is driven by a 3/4 HP open drip proof motor which is easily adjustable for tightening the V-belt drive. The revolving belts are driven by a noiseless gear belt system which never needs lubrication.

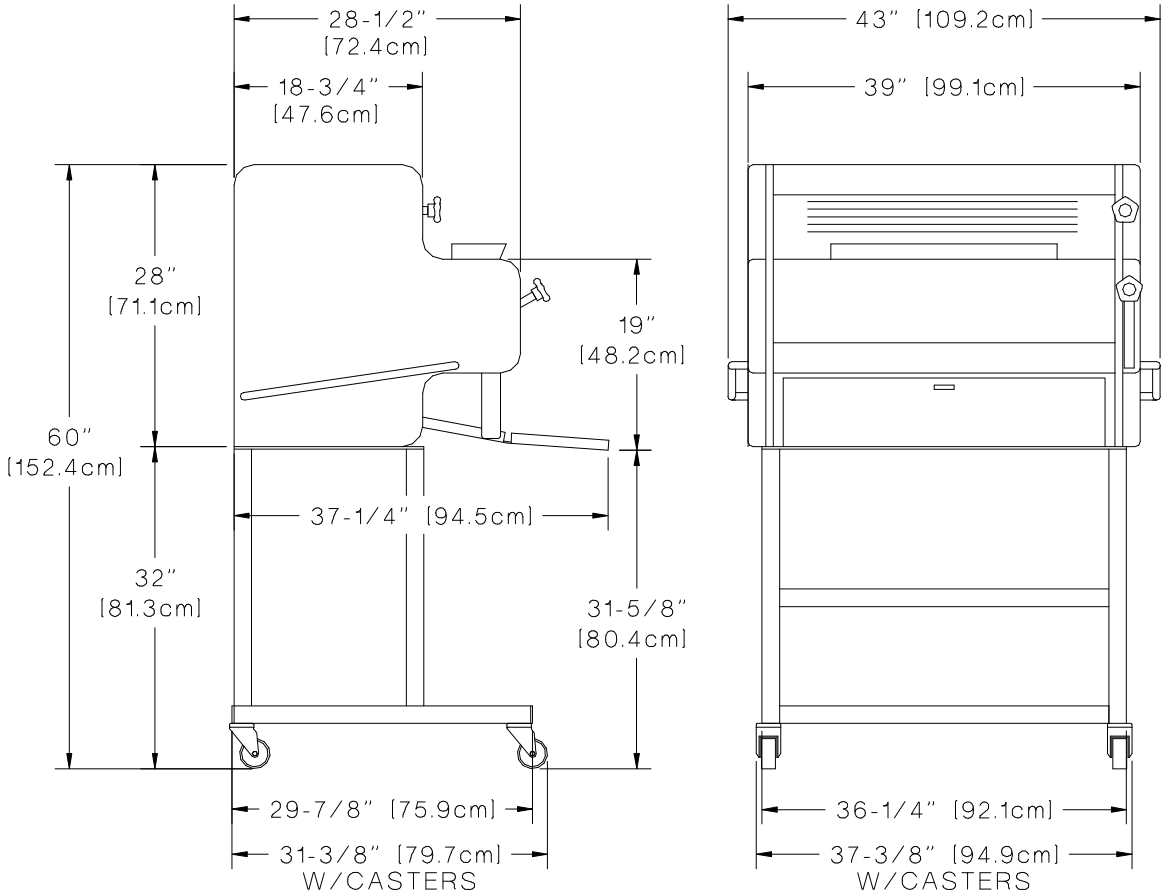

1.2 Dimensional Specifications

Product Capacities:
2 ounces (0.1kg) to 6 pounds (3.0kg)

Net Weight:
Approximately 380 pounds
425 pounds with stand

Shipping Weight:
Approximately 575 pounds

Machine size:
Width = 43 inches
Height = 28 inches,
Height OA = 60 inches
Depth = 28-1/2 inches,
Depth OA = 37-1/4 inches

1.3 Electrical Specifications

208-220/440 Volts AC
3 Phase, 50/60 Hz,
3/4 Horse Power
3.1-3.1/1.5 AMPS.

1.4 Wiring Diagram

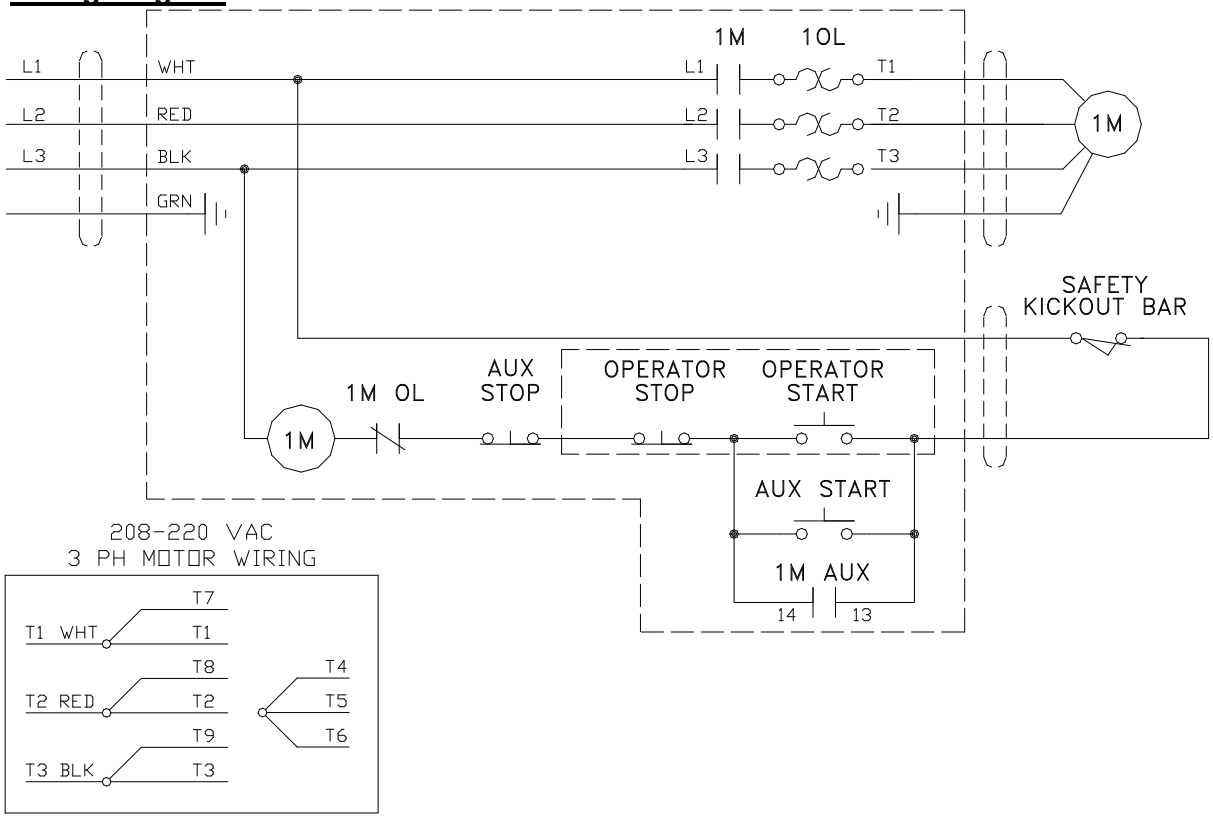

2.0 MACHINE INSTALLATION

2.1 Electrical Requirements

First, check the wall receptacle to be sure it is a three phase, 230 volt receptacle. If not, one must be installed. Attach a three phase, 230 volt plug to the end of the power cord. Be sure the pattern of the wall receptacle and pattern of the plug are matching.

NOTE
A TWIST-LOCK TYPE PLUG MUST BE USED ON THE 600-R3 SERIES OF DOUGH MOULDERS POWER CORD TO KEEP IN COMPLIANCE WITH ETL SAFETY REQUIREMENTS.

Before putting machine into operation, check to see if the machine is running in the correct direction. (See Section 2.2).

2.2 Machine Running Direction

To check for proper running direction you must first disengage the heavy mat, (Item #808, Assembly Drawing 5.1.1) by removing the left and right heavy mat support springs (Item #809, Not Shown) from their posts located towards the top. Lay the heavy mat and under lying felt over the front of machine. Then switch the machine on briefly and observe the direction in which the front triangular belt is moving. If the belt is moving upward the belt rotation is correct. If the belt is moving downward the machine

3.0 OPERATING INSTRUCTIONS

3.1 Machine Preparation

Always flour the delivery outfeed table felt generously and thoroughly. You should also flour the dough as thickly as possible, all around. Also, when preparing to run the moulder we recommend that you first weigh as many pieces of dough as possible in advance.

3.2 Establishing Settings

NOTE
AD USTMENTS SHOULD BE MADE WHILE THE MACHINE IS RUNNING.

Gently drop a piece of dough in the hopper and observe its shape after moulding.

- If the loaf is too compact, open the sheeting rollers.
- If the loaf is not compact enough, close the sheeting rollers.
- If the loaf is too short, close the rear chamber.
- If the loaf is too long, open the rear chamber.
- If the loaf is too fat in the center, close the sheeting rollers while sheeting, or, the dough may be too stiff.
- If the ends twist, open the rear chamber.

We recommend that all settings be recorded for later use once they are established. Remember, results may vary depending on dough condition. If required, make adjustments gradually starting with the original established setting.

ESTABLISHED SETTINGS
FOR SHEETING ROLLERS REAR CHAMBER OPENINGS

LOAF TYPE	SHEETING	STRETCHING

WARNING

ALWAYS MAKE SURE THE MACHINE HAS BEEN DISCONNECTED FROM THE POWER SUPPLY BEFORE CLEANING OR SERVICING.

4.0 CLEANING / MAINTENANCE

4.1 Cleaning

The machine should receive general cleaning at regular intervals with special attention given to the following:

WEEKLY:

- The belts and felt pad on the delivery outfeed table should be thoroughly brushed. Do **NOT** use a metal dough cutter.
- The upper scraper should be removed and cleaned to eliminate scraps of dried dough which might scratch the roller, (section 4.2, procedure 2), for removal of the scraper.

In general the moulder requires little additional maintenance other than that which is specified below. Most of the drives are supplied by either gear belt or V-belt, neither should be lubricated.

4.2 Changing the Felt Under the Heavy Mat

1. Remove the intake cover, (Item #738, Drawing 5.1.1).

2. Remove the two upper scraper tension springs, (Item #816, Drawing 5.1.1), and then disengage the upper scraper, (Item #807, Drawing 5.1.1), by pushing it to the left and lifting it out. Note, the lower scraper is pushed to the right to be remove.

3. Unhook the heavy mat, (Item #808, Drawing 5.1.1), by removing the heavy mat support springs (Item #809, Not Shown), from their post

4.3 Changing the V-Belt

Should the V-belt drive on the motor become loose and begin to slip it can be tightened simply by adjusting the motor bracket frame, see below.

1. Remove the back cover. Remove the orange handle bar (right side only). The two nuts securing the handle bar are located on the inside of the frame. Remove the right side plastic housing, (Item #234, Not shown, Refer to Item #235, Drawing 5.1.1).

2. Loosen the motor adjustment lock down screw.

3. Lift the motor and bracket to allow removal of the belt.

4. To reassemble simply reverse the above procedure.

5. After installing the belt run the machine a few minutes and recheck the belt for proper tightness before replacing the side housing.

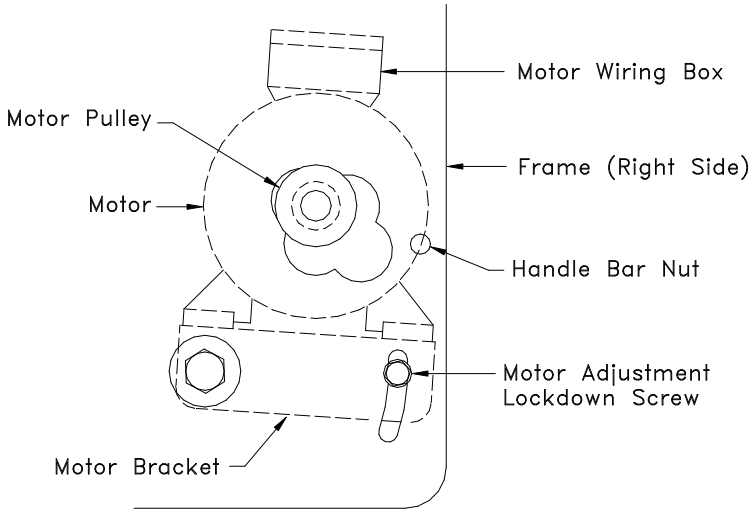

V-Belt and Motor Replacement

4.4 Replacing the Motor

1. Remove the V-belt, (Section 4.3, Procedures 1 through 3).

2. Remove the wires and the pulley from the motor. Remove the screws securing the motor to the motor bracket and then pull the motor out from the machine.

3. Replace the motor by reversing the above procedure. Be sure to check that the replacement motor is rotating in the proper direction before reinstalling the V-belt and covers.

4.5 Removing the Rear Chamber Assembly and Belt

1. Remove the back cover. Remove both orange handle bars. The four nuts securing the handle bars are located on the inside of the frame. Remove both side plastic housings, (Items #234 and #235, Drawing 5.1.1).

2. Remove the V-belt, (Section 4.3).

3. Close the rear chamber opening to its maximum, dial reading

4.6 Removing the Sheeting Rollers

1. Remove the covers and timing belt, (Section 4.5, Procedures 1 and 3),

NOTE

ALWAYS REPLACE THE BEARINGS WITH NEW ONES WHENEVER THEY HAVE BEEN REMOVED FROM MACHINE.

4.6.2 Removing the Lower Adjustable Sheeting Roller

1. Follow all the procedures in section 4.6. The intake cover will need to be completely removed at this time.

2. Remove the left and right lower scraper tension springs, (Item #811, Drawing 5.1.1), and then disengage the lower scraper (Item #804, Drawing 5.1.1) by pushing it to the right and lifting it out.

3. Remove the lower timing belt pulley, (Item #325, Drawing 5.1.2) from the left end of the roller

4. Loosen the screw on the left hand rocking device, (Item #212, Drawing 5.1.2) that locks the left hand bearing in placs.

5. Remove the small retaining snap rings from both ends of the roller shaft. Using a puller, push the right end of the roller shaft out of the right hand bearing. Once the left hand bearing has cleared the left hand rocking device, remove the left hand bearing. The lower sheeting roller can now be removed from the machine by pushing the roller to the left until the right end is free. Lift the right end of roller out from the machine and slide the roller completely to the right and out from the machine.

6. Reassemble by reversing the above procedure.

NOTE

ALWAYS REPLACE THE BEARINGS WITH NEW ONES WHENEVER THEY HAVE BEEN REMOVED FROM MACHINE.

4.7 Replacing the Front Triangular Belt

4.7.1 Removing the Belt

1. To change the front triangular belt you should remove the following items referring to the appropriate section; Heavy mat (Section 4.2), V-belt (Section 4.3), Rear chamber Assembly (Section 4.5), and the Adjustable lower sheeting roller (Section 4.6.2). The stationary upper sheeting roller does not have to be removed.

2. Remove the left and right belt guides, (Items #708 & #709, Drawing 5.1.1).

3. **Lower Tension Cylinder** (Item #318, Drawing 5.1.1) -Remove the right and left lower tension stirrups, (Item #103, Drawing 5.1.1), from the lower tension cylinder, (Item #318, Drawing 5.1.1). Push the tension cylinder all the way to the left, lift and remove through the opening in the right side frame.

4. **Upper Drive Cylinder** (Item #316, Drawing 5.1.1) -Remove the V-belt pulley, (Item #215, Drawing 5.1.3). Remove the (3) screws from the left bearing housing, (Item #208, Drawing 5.1.2), at the left end of the upper drive cylinder, (Item #316, Drawing 5.1.1), and the (3) screws from the right bearing housing (Item #210, Not shown) at the right end of the drive cylinder. Remove the drive cylinder through the opening in the left side frame.

5. **Front Bearing Plate** (Item #710, Drawing 5.1.1) -Remove the (2) snap rings from the right or left end of the front bearing plate support rod, (Item #714, Not shown) located at the top of the bearing plate. With a hammer and punch, tap the support rod all the way out the opposite side of the frame. Remove the (2) bolts and cylindrical nuts located on both sides at the bottom of the bearing plate. Remove the front bearing plate, (Item #714, Not shown) through the opening in the right side frame.

6. **Rear Bearing Plate** (Item #711, Drawing 5.1.1) -Remove the rear chamber retention spring, (Item #109, Drawing 5.1.3). Remove the (2) hex nuts and bolts from the rear chamber adjustment pillow block, (Item #641, Drawing 5.1.3). Remove the rear chamber adjustment screw assembly as a whole, including; (Items #631, 633, 634 and 641, Drawing 5.1.3). Also remove the drive pin for the rear chamber adjusting lever. Remove the (2) snap rings from the right or left end of the rear bearing plate support rod, (Item #716, Drawing 5.1.1) located at the bottom of the bearing plate. With a hammer and punch, tap the support rod all the way out the opposite side of the frame. Lift the rear bearing plate, (Item #711, Drawing 5.1.1) from the rear chamber connecting rod shaft and remove through the opening in the right side frame.

Upper Connecting Rods (Item #314, Drawing 5.1.1) -Remove the (3) screws from the bearing housing, (Item #210, Drawing 5.1.2) at the left end of the upper connecting rod shaft, (Item #314, Drawing 5.1.1). Remove the connecting rods and shaft through the opening in the left side frame.

4.7.1 Removing the Front Triangular Belt cont

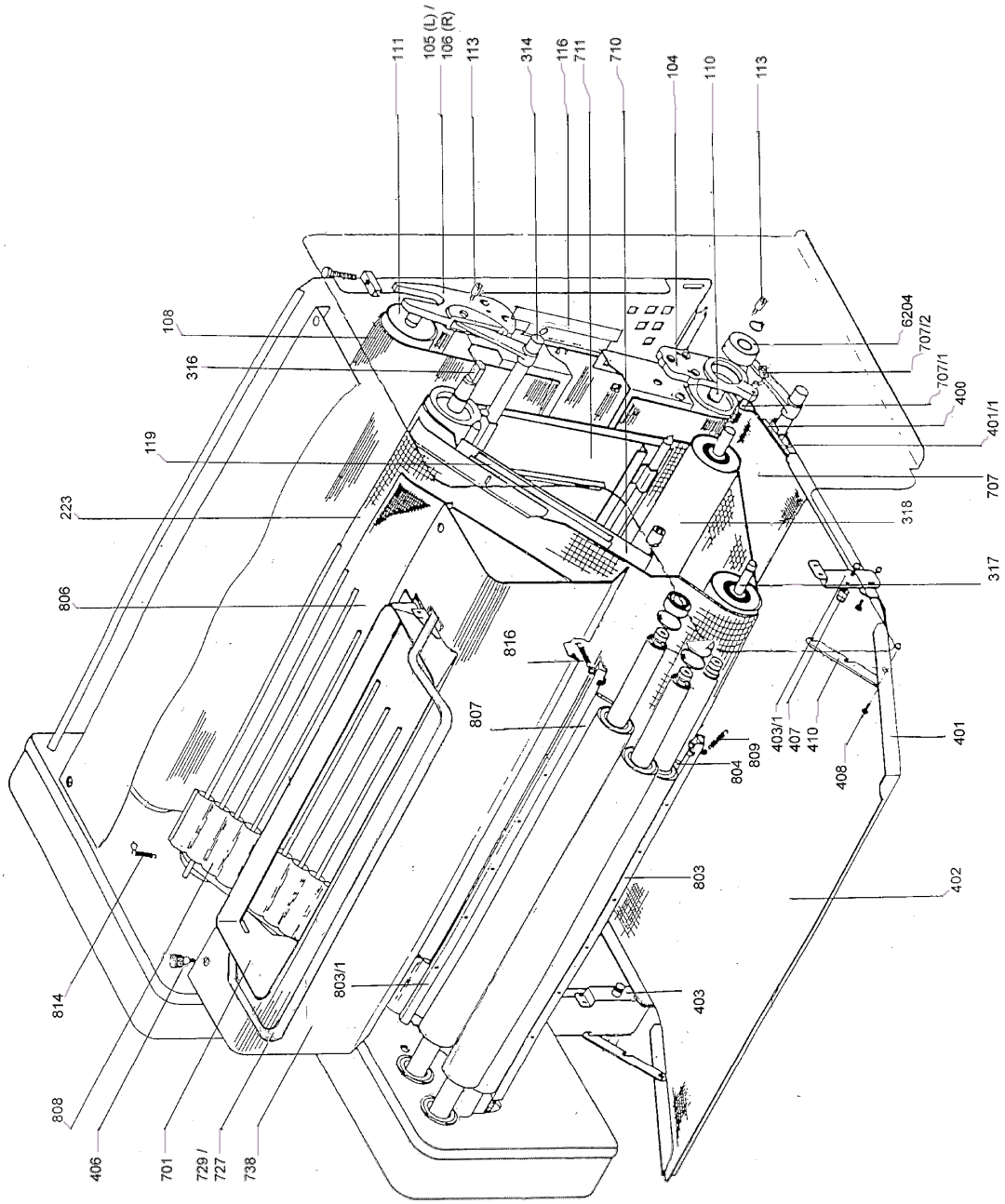
111
105 (L) /
106 (R)
113
314
116
711
710
104
110
113
108
316
119
223
806
816
807
814
808
406
701
729 /
727
738
803/1
803
403
402
804
809
403/1
407
410
408
401
317
318
707
401/1
400
707/1
707/2
6204

5-1

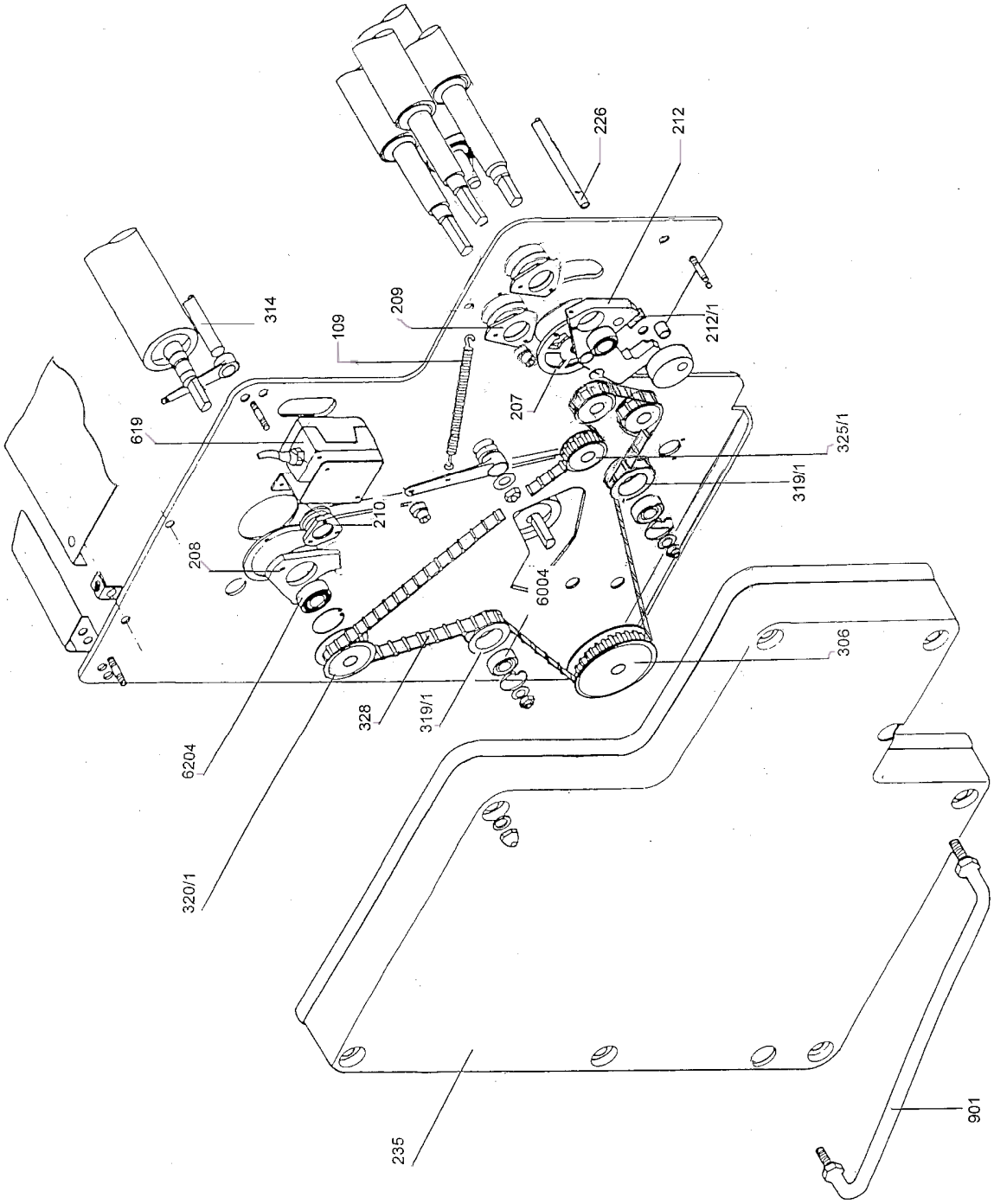
226
212
314
209
109
212/1
207
619
325/1
319/1
210
208
6004
306
328
319/1
6204
320/1
235
901

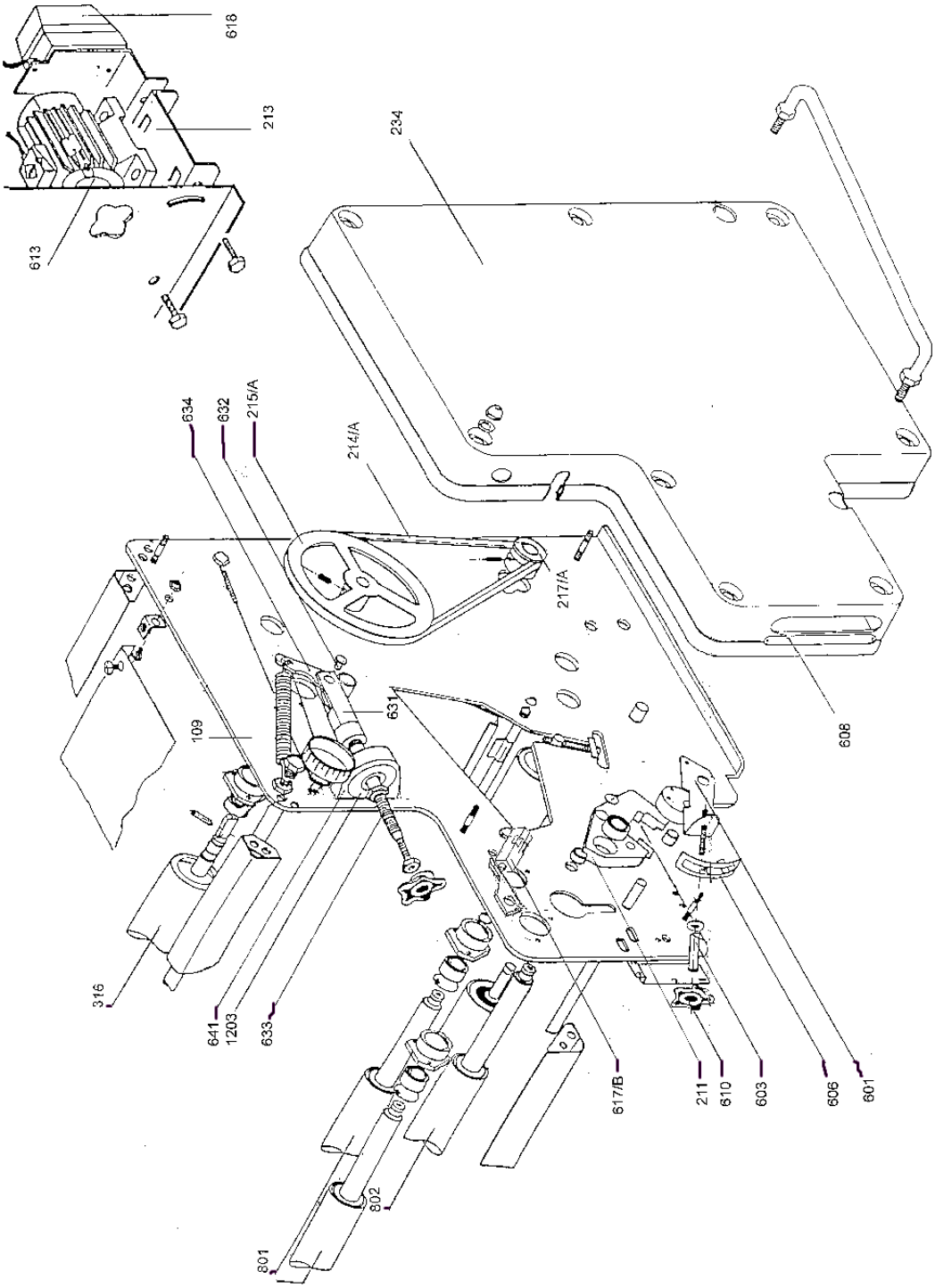
618
213
613
234
634
632
215/A
214/A
217/A
631
109
608
316
641
1203
633
617/B
211
610
603
606
601
802
801

Oliver Packaging and Equipment Company (800) 253-3893
3236 Wilson DR NW Walker, MI 49534 www.oliverquality.com

MECHANICAL REPLACEMENT PARTS LIST
EXPLODED VIEW

ITEM NUMBER	OLIVER PART #	PART DESCRIPTION	QTY
104	6824-3200	LOWER RIGHT SIDE	1
105	6824-3201	UPPER LEFT SIDE	1
106	6824-3202	UPPER RIGHT SIDE	1
108	6824-3112	BELT BACK ENDLESS	1
109	6824-3056	BALANCING SPRING	1
110	6824-3073	DRIVE CYLINDER	1
111	6824-3074	CYLINDER TENSION REAR	1
113	6824-3203	CHAMBER SPACER	1
114	6824-3204	LOWER TAB-CHAIN SIDE	1
116	6824-3205	REAR CHAMBER BELT	1
207	6824-3103	HOUSING-IDLER-CYLINDER BRG	1
208	6824-3080	HOUSING-DRIVE CYLINDER BEARING	1
209	6824-3104	HOUSING-STATIONARY LEFT BRG	1
210	6824-3081	HOUSING-BEARING	1
211	6824-3206	RIGHT ROCKING DEVICE/CNTRL SIDE	1
212	7012-2008	SPRING	1
214 /A	5601-1332	BELT-POLY V HUTCHINSON #1280 J	1
215 /A	6824-3121	PULLEY-DRIVE	1
217 /A	6824-3207	MOTOR PULLEY	1
219	6200-0009	STIRRUP TENSION	1
220	6824-3208	LEFT SIDE PIECE	1
223	6824-3113	BELT FRONT SYNTHETIC (FOOD APP)	1

Oliver Packaging and Equipment Company (800) 253-3893
3236 Wilson DR NW Walker, MI 49534 www.oliverquality.com

MECHANICAL REPLACEMENT PARTS LIST
EXPLODED VIEW

ITEM NUMBER	OLIVER PART #	PART DESCRIPTION	QTY
234	6824-3099	HOUSING-RIGHT SIDE PLASTIC	1
235	6824-3100	HOUSING-LEFT SIDE PLASTIC	1
237	6824-3209	GREY PLASTIC RUSH	1
244	6824-3210	BELT GUIDE INTERNAL RING	1
306	6824-3128	PULLEY TIMING 28HO75 REAR CHAM	1
312	6824-3211	BELT TENSION CONECTING ROD	1
316	6824-3075	CYLINDER-DRIVE TRIANGLE	1
317	6824-3076	CYLINDER-IDLER TRIANGLE	1
318	6824-3077	CYLINDER-TENSION TRIANGLE	1
319 /1	6824-3106	PULLEY-BELT TENSIONER	1
320 /1	6824-3212	DRIVE CYLINDER PINION 24d	1
321	6824-3213	ROLLER AXIS	1
322	6824-3107	AXLE-BEARING	1
325 /1	6824-3082	PULLEY-TIMING BELT #42325/1	1
328	6824-3215	NOTCHED BELT 700H 075 DL	1
400	6824-3216	TABLE FELT DIAMETER 8 SHAFT	1
401	6824-3217	HINGED DELIVERY TABLE	1
401 /1	6824-3218	DELIVERY TABLE-SQUARE	1
402	6824-3114	BELT-SYNTHETIC OUTFEED TABLE	1
403	6824-3219	HINGED TABLE LEFT TAB	1
403 /1	6824-3220	HINGED TABLE RIGHT TAB	1
406	6824-3221	INTAKE CHUTE SCREW	1

Oliver Packaging and Equipment Company (800) 253-3893
3236 Wilson DR NW Walker, MI 49534 www.oliverquality.com

MECHANICAL REPLACEMENT PARTS LIST
EXPLODED VIEW

ITEM NUMBER	OLIVER PART #	PART DESCRIPTION	QTY
407	6824-3159	CATCH PIN (COMPASS HANGING STOP)	1
408	6824-3222	SPACER ARM JOINT	1
410	6824-3160	HOOK LATCH	1
601	6824-3111	LEVER-SHEETING CONTROL	1
603	6824-3064	PIN-LEVER	1
606	6824-3095	BELT-HEAVY MAT (LOAD-15 BAR)	1
608	6824-3164	SHEETER SCALE 1-9	1
609	6824-3223	CHAMBER SCALE 0-24	1
610	6824-3090	KNOB-BLACK	1
613	6824-3078	MOTOR-3/4HP	1
619	5720-4200	ENCLOSURE-2 PB	1
631	6824-3124	ARM REAR CHAMBER ADJUST.	1
632	6824-3125	PIN-ARM RETAINING	1
633	6824-3126	SCREW-REAR CHAMBER ADJUST.	1
641	6824-3127	BLOCK-PILLOW REAR CHAMB ADJ.	1
701	6824-3224	STAINLESS STEEL HOPPER	1
707	6824-3115	BELT-SYNTHETIC OUTFEED FLAP	1
707 /1	6824-3225	OUTLET FLAP	1
707 /2	6824-3226	FLAP PIN	1
718 /1	6824-3227	OUTLET FLAP TAB	1
722	6824-3132	TOP-COVER	1
723	6824-3133	BACK-COVER	1

Oliver Packaging and Equipment Company (800) 253-3893
3236 Wilson DR NW Walker, MI 49534 www.oliverquality.com

MECHANICAL REPLACEMENT PARTS LIST
EXPLODED VIEW

ITEM NUMBER	OLIVER PART #	PART DESCRIPTION	QTY
729	6824-3118	BAR-SAFETY KICKOUT	1
737	7023-3100	SPRING-EXTENSION	1
738	6824-3156	COVER-INTAKE	1
738 /1	6824-3157	BRACKET-SAFETY BAR	1
801	6824-3065	ROLLER-FIXED	1
802	6824-3066	ROLLER-ADJUSTABLE	1
803/1	6824-3255	UPPER SCRAPER - SHAFT	1
807	6824-3055	UPPER SCRAPER - BLADE	1
816	6824-3058	UPPER SCRAPER - SPRINGS	2
803	6824-3067	LOWER SCRAPER - SHAFT	1
804	6824-3150	LOWER SCRAPER – BLADE	1
809	7022-4118	LOWER SCRAPER – SPRINGS	2
805	6824-3095	BELT-HEAVY MAT (LOADING 17 BARS)	1
805 /1	6824-3228	HEAVY BELT + 17 BARS – LG 830mm	1
805 /2	6824-3229	HEAVY BELT + 17 BARS – LG 770mm	1
806	6824-3116	BELT-UNDER HEAVY MAT SYNTHETIC	1
808	6824-3101	MAT-HEAVY, LEFT & RIGHT	1
808 /1	6824-3230	RIGHT CARTRIDGE BELT	1
810	6824-3231	HEAVY BELT SHAFT	1
814	6824-3117	SPRING-HEAVY BELT	1
901	6824-3122	HANDLE-BAR	1

Oliver Packaging and Equipment Company (800) 253-3893
3236 Wilson DR NW Walker, MI 49534 www.oliverquality.com

MECHANICAL REPLACEMENT PARTS LIST
EXPLODED VIEW

ITEM NUMBER	OLIVER PART #	PART DESCRIPTION	QTY
236	6824-3232	PIN HOLDING HOUSING	1
1203	6824-3233	BEARING 1203 TV	1
6004	6824-3234	BEARING 6004	1
6204	6824-3235	BEARING 6204	1
617 /B	6824-3236	HOPPER SAFETY SWITCH	1

THIS PAGE WAS INTENTIONALLY
LEFT BLANK.

Oliver Packaging and Equipment Company (800) 253-3893
3236 Wilson DR NW Walker, MI 49534 www.oliverquality.com

WARRANTY PROCEDURE

1. If a problem should occur, either the dealer or the end user must contact the Parts and Service Department and explain the problem.

2. The Parts and Service Manager will determine if the warranty will apply to this particular problem.

3. If the Parts and Service Manager approves, a Work Authorization Number will be generated, and the appropriate service agency will perform the service.

4. The service dealer will then complete an invoice and send it to the Parts and Service Department at Oliver Packaging & Equipment Company.

5. The Parts and Service Manager of Oliver Packaging and Equipment Company will review the invoice and returned parts, if applicable, and approve for payment.

THIS PAGE WAS INTENTIONALLY
LEFT BLANK.

Oliver Packaging and Equipment Company (800) 253-3893
3236 Wilson DR NW Walker, MI 49534 www.oliverquality.com

RETURNED PARTS POLICY

This policy applies to all parts returned to the factory whether for warranted credit, replacement, repair or re-stocking.

Oliver Packaging and Equipment Company requires that the customer obtain a Return Material Authorization (RMA) number before returning any part. This number should appear on the shipping label and inside the shipping carton as well. All parts are to be returned prepaid**.** Following this procedure will insure prompt handling of all returned parts.

To obtain an RMA number contact the Repair Parts Deptartment toll free at (800) 253-3893.

Parts returned for re-stocking are subject to a **RE-STOCKING CHARGE**.

Thank you for your cooperation,

Repair Parts Manager
Oliver Packaging and Equipment Company