Walker, Michigan, U.S.A. 49534-7564

USER'S OPERATING AND INSTRUCTION MANUAL

MODELS 695 & 695D

PROOFERS

695S20000-CV

Oliver Packaging & Equipment Company
3236 Wison DR NW Walker MI. 49534
(800) 253-3893
www.oliverquality.com

695 PROOFER

INDEX

Continued

Revised 8-14-03

695 PROOFER

INDEX (Continued)

REV. 2/26/04

Oliver Packaging & Equipment Company
3236 Wison DR NW Walker MI. 49534
(800) 253-3893
www.oliverquality.com

695 PROOFER

SAFETY INSTRUCTIONS

WARNING

VARIOUS SAFETY DEVICES AND METHODS OF GUARDING HAVE BEEN PROVIDED ON THIS PROOFER. IT IS ESSENTIAL HOWEVER THAT THE PROOFER OPERATORS AND MAINTENANCE PERSONNEL OBSERVE THE FOLLOWING SAFETY PRECAUTIONS. IMPROPER INSTALLATION, MAINTENANCE, OR OPERATION COULD CAUSE SERIOUS INJURY OR DEATH.

1. Read this manual before attempting to operate your proofer. Never allow an untrained person to operate or service this machine.

2. This proofer must only be installed by qualified personnel. It also must be installed to the specifications of local plumbing and electrical codes. See the installation section of this manual for additional requirements.

3. Connect the proofer to a properly grounded electrical supply that matches the requirements shown on the electrical specification plate and follow specifications of local electrical codes.

4. Disconnect and lock-out the proofer from the power supply before cleaning or servicing.

5. Check and secure all guards before starting the proofer.

6. Observe all caution and warning labels affixed to the proofer.

7. Use only proper replacement parts.

8. Wear proper personal protective safety equipment.

9. Keep Hands away form the moving parts of this proofer while it is in operation.

10. In addition to these general safety instructions, also follow the more specific safety instructions given for the different areas of the proofer in the operating instructions.

WARNING

DO NOT USE FOR OTHER THAN ORIGINALLY INTENDED PURPOSE.

Oliver Packaging & Equipment Company
3236 WISON DR NW WALKER MI. 49534
(800) 253-3893
www.oliverquality.com

695 PROOFER

DESCRIPTION/SPECIFICATIONS

Description

The Proofer is a stainless steel, electric, forced air, proofer with adjustable temperature and humidity capabilities. This proofer offers consistent proofing at all rack levels due to the careful positioning of the heating and humidification systems.

In addition to the above, this proofer also offers many other features. It is compact, attractive, quiet, and is easily maintained. Should electrical servicing ever be required the electrical components are readily accessible by removing the side panel.

The clear polycarbonate door with its high temperature seal allows a full view of the trays in the proofer during proofing.

The proofer also has one of the fastest temperature and humidity recoveries on the market allowing the proofer to be turned off during non-peak hours, thus saving energy.

The proofer controls allow easy adjustment of temperature and humidity. This allows proofing by even inexperienced individuals.

Physical Specifications

Electrical Options Available:

1 phase, 60 hz, 115VAC, 14.5 Amps.
(20 amp Dedicated Circuit)

Product Capacities:

The proofer will hold (8) 18" X 26" pastry baking trays, these trays will be approximately 3 inches apart when in the proofer.

695 PROOFER

Space Requirements:

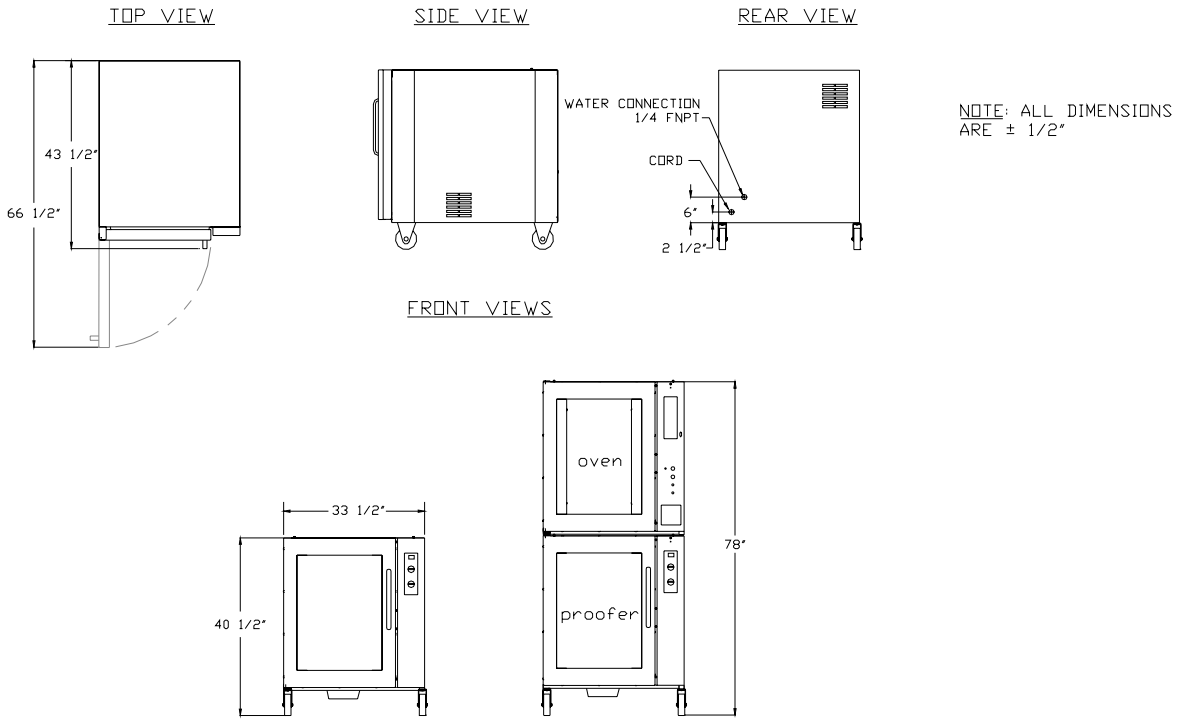

Figure 1.0

single: 43 1/2” Deep x 33 1/2” Wide x 40-1/2” high. (with casters)
stacked oven and proofer with casters: 78”

Clearance:

Left side = 2”.

Right side = 2” with casters.

Back side = 4” to allow for water connection.

Net Weight: Approximately 300 pounds.

Shipping Weight: Approximately 395 pounds.

695 PROOFER

INSTALLATION / SETUP

Inspection

Before accepting delivery inspect the carton and machine for damage. Note any damage found on the shipping documents. Remember shipping damage **is not** covered by your warranty, and is the responsibility of the carrier. Also report the damage to the dealer from which the proofer was purchased for further direction and assistant in filing a claim with the carrier.

Location Selection

Select a location where the proofer will be used. The proofer must be set on a flat level surface. It should have a grounded power supply of the same rating as shown on the nameplate located on the rear of the proofer and this power supply must be capable of carrying the load that the proofer will put on it (See "Electrical Connection" page 3-2). The proofer must also be placed near a water supply. (See "Water Connection" below).

Proofers with casters should be placed so that they have a minimum of two inches on each side and a minimum of four inches in the rear of the proofer to provide for proper water, and electrical connections.

Proofer Setup

Proofers may stand alone or be stacked with a Oliver oven (oven must be on top of proofer). For associated mounting heights for the above options see figure 3.0 on page 2-2.

CAUTION

USE CARE WHENEVER MOVING OVENS MOUNTED ON PROOFERS AS THEY ARE TOP HEAVY AND PRESENT A TIPPING HAZARD.

A stacked oven should be setup as shown on page 2-2 being sure that the alignment pins on the top of the lower proofer are securely positioned into the holes in the base of the upper oven.

695 PROOFER

Electrical Connection

WARNING

THE PROOFER MUST BE CONNECTED TO A PROPERLY GROUNDED ELECTRICAL SOURCE OF THE SAME RATING AS THE MACHINE. FAILURE COULD RESULT IN AN ELECTRICAL SHOCK WHICH MAY CAUSE INJURY OR DEATH.

WARNING

ALL WIRING AND ELECTRICAL REPAIRS SHOULD BE DONE BY A QUALIFIED ELECTRICIAN. FAILURE TO DO SO MAY CAUSE SERIOUS INJURY OR DEATH.

CAUTION

A SPECIAL HEAVY DUTY ELECTRICAL SERVICE MUST BE PROVIDED FOR SAFE OPERATION OF THE PROOFER.

The following service requirements are recommended, dependent on the voltage of the unit you have purchased. Your proofer's requirements can be found on the nameplate attached to its rear surface.

For voltages other than those shown below please contact the factory.

1 phase, 60 hz, 115VAC, 14.5 Amps.
(20 amp Dedicated Circuit)

The proofer is shipped from the factory with a power cord. Leave at least two feet of slack so that access can be gained to the proofers right side. This makes sliding the proofer out for service more convenient. Whatever method is used the proofer should be wired in a manner which would conform to the U.S. "National Electric Code".

695 PROOFER

Water Connection

All water connections must comply with the basic plumbing code of the Building Officials and Code Service Sanitation Manual of the Food and Drug Administration (FDA)

CAUTION

WATER PRESSURES GREATER THEN RECOMMENDED CAN CAUSE EXCESS WATER TO ENTER THE PROOFER CAUSING WATER TO LEAK AT THE DOOR AND ALSO CAUSE THE HUMIDITY TO DROP SEVERELY AFFECTING THE PROOF. USE A PRESSURE REGULATOR TO REGULATE THE PRESSURE.

The proofer must be connected to a water supply to enable the proofer to produce humidity for baking. As shipped from the factory the proofer will have a water connection point at the back of the proofer, (See figure 3.0 page 2-2). This connection has an internal 1/4" NPT thread. Water pressure should be a maximum of 60 to 70 PSI and the water must clean. Use a pressure regulator and a water strainer/filter to meet these guidelines. Before making the water connection flush all lines and install the regulator and filter. Remember solenoid failure and related problems caused by dirt may not be covered by your warranty.

NOTE

HARD WATER LEAVES MINERAL DEPOSITS ON GLASS AND OTHER SURFACES WHICH DETRACT FROM PROOFERS APPEARANCE.

Test Cycle

After completing the Set Up, Electrical and Water connections, you may wish to run the proofer through a test cycle to verify that everything is ready. Use the following sequence to run the proofer through a test cycle.

- Turn the power switch on – internal fan should run.
- Set temperature control to highest setting – proofer should begin to heat. (allow several minutes).
- Set temperature control to off, humidity control to highest setting – water tray should begin to fill and shut-off when proper level has been reached. water should also begin to heat. (allow several minutes).

Revised 8-12-03

Oliver Packaging & Equipment Company
3236 Wison DR NW Walker MI. 49534
(800) 253-3893
www.oliverquality.com

695 PROOFER

OPERATING INSTRUCTIONS – MANUAL CONTROLS

Control Panel

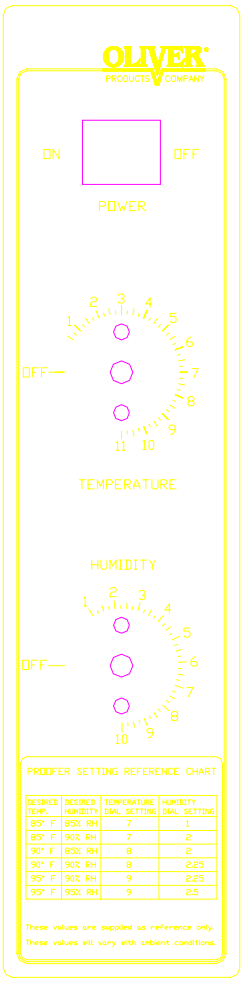

DESIRED TEMP.	DESIRED HUMIDITY	TEMPERATURE DIAL SETTING	HUMIDITY DIAL SETTING
85° F	85% RH	7	1
85° F	90% RH	7	2
90° F	85% RH	8	2
90° F	90% RH	8	2.25
95° F	90% RH	9	2.25
95° F	95% RH	9	2.5

Figure 2.0

Beginning Operation

First turn the proofer on using the power switch.

Set desired temperature and humidity using the chart (figure 3.0, page 4-2) as a guide.

Allow several minutes for the proofer to reach desired settings.

Place pans in proofer, check frequently until proper proof has been achieved.

695 PROOFER

Temperature – Humidity Reference Chart

Figure 3.0

Proofer Setting Reference Chart

Desired Temp.	Desired Humidity	Temp. Dial Setting	Humidity Dial Setting
85º F	85% RH	7	1
85º F	90% RH	7	2
90º F	85% RH	8	2
90º F	90% RH	8	2.25
95º F	90% RH	9	2.25
95º F	95% RH	9	2.5

These values are supplied as reference only.

These values will vary with ambient conditions.

695 PROOFER

OPERATING INSTRUCTIONS – DIGITAL CONTROLS

Control Panel

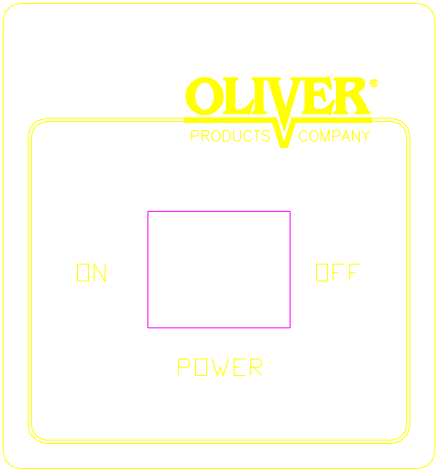

Figure 4.0

Beginning Operation

First turn the Proofer on using the power switch.

Proofer will start preheating to last set temperature and humidity. (**PrEH** will be displayed until unit has reached temperature and RH settings then **REAdy** will be displayed – ***Proofing can now be started***).

(continued)

695 PROOFER

Beginning Operation (continued)

Indicator LED's show when heat and / or steam are on.

Up and Down Keys

The Up and Down keys are used to adjust settings (either Time, Temperature, or RH). *Settings* (as opposed to actual *readings*) are recognized on the display by 2 things: the left most triangle is lit (i.e.  means that 80º C is the set point, and *not* the actual temperature); the Up/Down keys LED's are also lit, meaning that they are usable to modify the displayed data.

To modify a setting, first press the required button for 2 seconds (Temperature or RH) and then use the Up or Down keys to modify it. To modify proofing Time, simply press Up or Down key directly when countdown time is displayed (while Proofing) or if Standby or Auto states are active.

After changing settings, there are up to 3 ways to accept the new values:

- Re-press the Temperature or RH key (if changing one of those settings)
- Press the Start key "I"
- Wait for 5 seconds

In any case, if a proofing cycle was already active when the setting was changed, it will simply continue with the new values. If the changed setting was Time, the new time is used (i.e. the Proofing cycle is restarted using the new Time).

When accepting a change, the Up/Down LED's shut off (as well as the Temperature or RH LED's and the settings triangle), and the display reverts to the previous state display (Proofing if Start was pressed).

Temp Key

A normal press of this key forces the display to show the current Temperature *reading.*

If the Temp key is held for 2 seconds, the display will show the current Temperature *setting*. Temp key, as well as Up and Down LED's are also lit, indicating that Temp setting can be changed if needed.

In either case, the display reverts back to its previous mode after 5 seconds of no activity.

(continued)

695 PROOFER

Beginning Operation (continued)

RH Key

A normal press of this key forces the display to show the current RH *reading.*

If the RH key is held for 2 seconds, the display will show the current RH *setting*. RH key, as well as Up and Down LED's are also lit, indicating that RH setting can be changed if needed.

In either case, the display reverts back to its previous mode after 5 seconds of no activity.

Start and Stop keys

These keys control the various states of the unit. Pressing Start "**I**" normally starts a Proofing cycle with the currently memorized settings (Time, Temperature, and RH).

Pressing the Stop key "**O**" cancels the current Proofing cycle if one is active. The unit returns to Off/Standby mode.

Time

Timer information is the default view in most states. The unit displays the time left if Proofing, or the current set time if in Off/Standby state.

Time is displayed in the standard HH:MM format. During the Proofing cycle, the time is also displayed as HH:MM; however, in the last 10 minutes of a Proofing cycle, MM:SS are displayed. Maximum time programmable is 11 hours and 59 minutes.

If time is set to 0:00, then it is assumed the user does not wish to use the timing functions, and the display will default to displaying current temperature when proofing. Standby in this case shows the current temperature too. Start button is not lit in this case either.
All other functions work normally.

695 PROOFER

TROUBLESHOOTING

WARNING

TROUBLE SHOOTING OF ELECTRICAL EQUIPMENT SHOULD BE PERFORMED BY QUALIFIED PERSONNEL ONLY. ELECTRICAL POTENTIAL IS GREAT ENOUGH TO CAUSE INJURY OR DEATH.

WARNING

NEVER ATTEMPT TO SERVICE THIS PROOFER UNTIL IT HAS BEEN DISCONNECTED FROM THE POWER SUPPLY. ALL ELECTRICAL WORK MUST BE DONE BY A QUALIFIED ELECTRICIAN.

CAUTION

BEFORE WORKING ON A PROOFER WHICH HAS BEEN RECENTLY USED ALLOW SUFFICIENT TIME FOR IT TO COOL TO PREVENT BURNS.

No Power.

- The machine is not plugged in.
- There is no power available at the outlet/disconnect

No Heat or Proofer Heats Slowly.

Allow several minutes for proofer to achieve desired setting. A cooled empty proofer can be heated from room temperature to 90 °F in five to ten minutes. If the proofer is not meeting this specification, check the following.

- Power switch is in off position.
- Temperature setting too low.
- Check fan in air duct for proper operation.
- Check the thermostat (upper manual control) or controller (digital proofer) for proper function.
- Check to see if the heating element in air duct is functioning.

(continued) Revised 8-14-03

695 PROOFER

No Humidity or Proofer Reaches Humidity Slowly.

- Power switch is in off position.
- Humidity setting too low.
- Check fan in air duct for proper operation.
- Check thermostat (lower manual control) or controller (digital proofer) for proper operation.
- Check to see if the heating element under water tray is functioning.

No Water

- Power switch is in off position.
- Humidity setting too low – only fills when humidity is needed.
- The water line to the proofer may not have been turned on or someone has turned it off.
- Your water line filter may be plugged or need servicing.
- The water solenoid valve may be dirty and stuck shut.
- The water solenoid valve may have failed.
- Check float switch for proper operation.

Water Is Leaking From the Door

It is normal for some condensation to drip from the door during operation, however, if excessive amounts of water are leaking from door you should check the following.

- Check float switch for proper operation.
- The water solenoid valve may be dirty and stuck open.

The Proofer is Proofing Unevenly

- Check fan in air duct for proper operation

Revised 8-14-03

Oliver Packaging & Equipment Company
3236 Wison DR NW Walker MI. 49534
(800) 253-3893
www.oliverquality.com

695 PROOFER

MAINTENANCE

WARNING

NEVER ATTEMPT TO CLEAN OR SERVICE THIS PROOFER UNTIL IT HAS BEEN DISCONNECTED FROM THE POWER SUPPLY AND IS COOL TO THE TOUCH.

NOTE

REMEMBER A CLEAN PROOFER WILL LAST LONGER AND WORK BETTER.

Cleaning

The outside of the proofer should be cleaned daily by wiping it with a clean damp cloth or by using any suitable stainless steel cleaner. A solution made up of a mild detergent with water will normally be sufficient for routine cleaning of the interior of the proofer. When finished dry the surfaces with a clean cloth.

The polycarbonate door should be cleaned daily using normal glass cleaners.

To simplify major cleanings the shelf racks may be removed by first removing the eight thumb srews which hold the racks in place.

The proofer door also may be lifted off for easier access during cleaning.

Clean the water tray frequently to insure efficiency and to eliminate any bacterial growth.

The heating elements themselves normally do not require cleaning.

Lubrication

Occasionally put a few drops of oil on the pivot points of the door. No other items requires lubrication.

CAUTION

NEVER LUBRICATE THE MOTORS

Revised 8-12-03

695 PROOFER

Electrical Component Replacement

WARNING

NEVER ATTEMPT TO SERVICE THIS PROOFER UNTIL IT HAS BEEN DISCONNECTED FROM THE POWER SUPPLY. ALL ELECTRICAL WORK MUST BE DONE BY A QUALIFIED ELECTRICIAN.

- Remove the front side panel which is located on the control side.
- After identifying the component which needs to be replaced remove its wires after marking them for ease of replacement.
- Remove the component.
- Re-install the component by reversing the removal procedures.

Oliver Packaging & Equipment Company
3236 Wison DR NW Walker MI. 49534
(800) 253-3893
www.oliverquality.com

695 PROOFER

RECOMMENDED SPARE PARTS

PART NUMBER	PART DESCRIPTION	NO. REQ'D
5757-3307	Switch – Rocker	1
0695-0019	Switch – Float	1
5730-2656	Heater – Tubular air	1
5730-2657	Heater – Tubular water	1
5148-6770	Valve - Solenoid	1
0695-0025	Motor - Fan	1
6310-5027	Fan-Axial 3000 RPM (Cooling Fan)	1
5148-5784	Valve – Needle	1
Specific to Manual Proofer		
5759-2000	Thermostat – Bulb and Cap (40-105 deg.)	1
5759-2001	Thermostat – Bulb and Cap (85-230 deg.)	1
5759-2050	Knob – Instrument	2
5749-8024	Relay-Power SPDT, 360w	2
Specific to Digital Proofer		
5712-4025	Overlay – Proofer Control	1
5749-8027	Relay – DPST 20A 120V Coil	2
5749-8024	Relay-Power SPDT, 360w	1

For Service Parts Call Oliver Products @ 800-253-3893

Revised 4-5-04

Oliver Packaging & Equipment Company
3236 Wison DR NW Walker MI. 49534
(800) 253-3893
www.oliverquality.com

695 PROOFER

ELECTRICAL PANEL – MANUAL CONTROLS

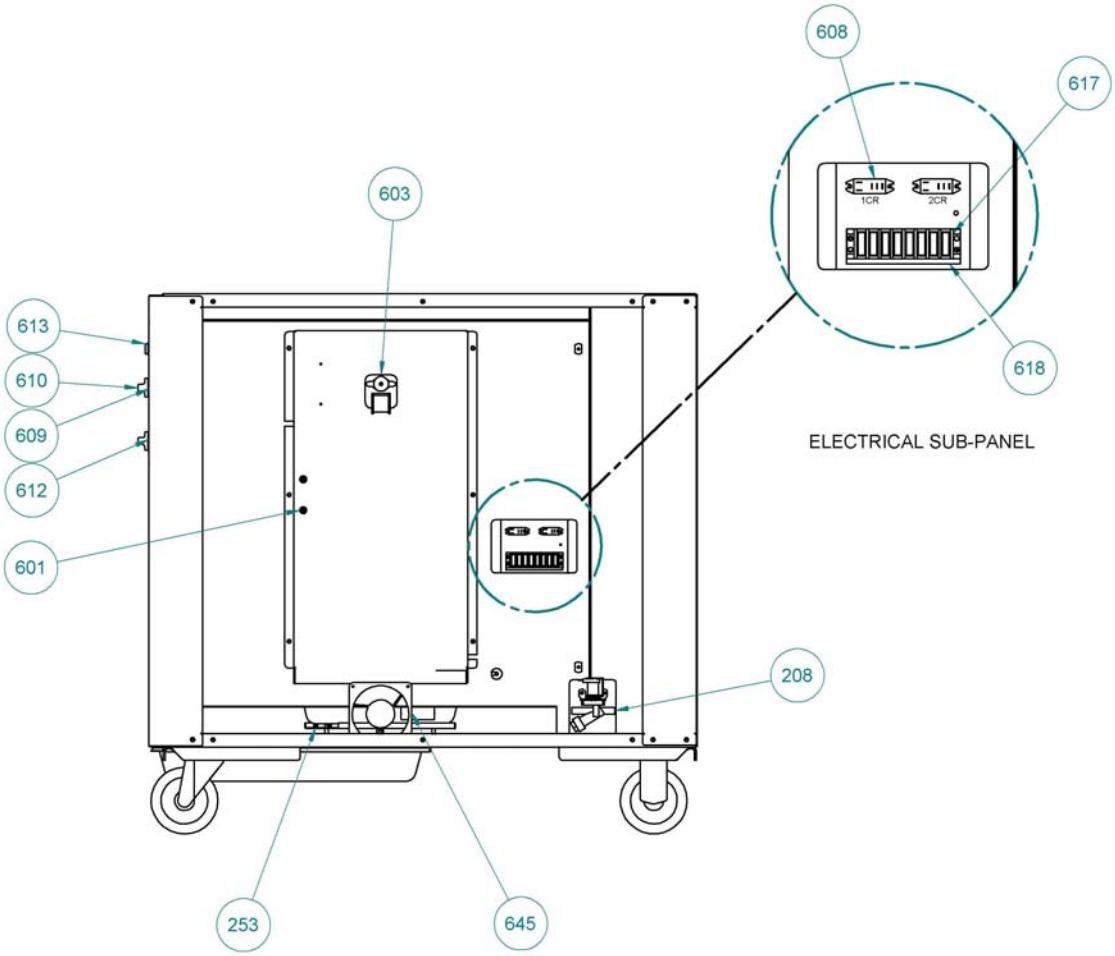

Revised 8-14-03

Oliver Packaging & Equipment Company
3236 WISON DR NW WALKER MI. 49534
(800) 253-3893
www.oliverquality.com

695 PROOFER

ELECTRICAL PANEL PARTS LIST – MANUAL CONTROLS

ITEM NO	PART DESCRIPTION	PART NUMBER
208	*SEE WATER SYSTEM LIST (PG. 11-2)*	
253	*SEE WATER SYSTEM LIST (PG. 11-2)*	
601	HEATER-TUBULAR AIR	5730-2656
603	MOTOR-FAN	0695-0025
606*	FAN-2 1/8 DIA. ALUM	5114-0010
607*	FAN-5.3 DIA ALUM	5114-0020
608	RELAY-POWER SPDT	5749-8024
609	THERMOSTAT-BULB AND CAP	5759-2000
610	KNOB-INSTRUMENT	5759-2050
612	THERMOSTAT-BULB AND CAP	5759-2001
613	SWITCH-ROCKER DPST	5757-3307
614*	CORD-POWER	0695-0026
615*	BUSHING-STRNRLF .27-.464 GRIP	5765-1082
617	BLOCK-TERM DBL RW 8 CIRC	5770-7451
618	STRIP-MRKR DBL RW 8 CIRC	5770-7328
619*	JUMPER-TERMINAL BLOCK	5770-7461
645	FAN-AXIAL 3000 RPM	6310-5027
646*	CORD-FAN POWER	0695-0044
647*	BRACKET-FAN MOUNTING	0695-0043
654*	PLUG – 20A / 125V	5765-2023

* ITEMS NOT SHOWN IN ILLUSTRATION.

FOR SERVICE PARTS CALL OLIVER PRODUCTS @ 800-253-3893
Revised 8-14-03

ELECTRICAL PANEL – DIGITAL CONTROLS

695 PROOFER

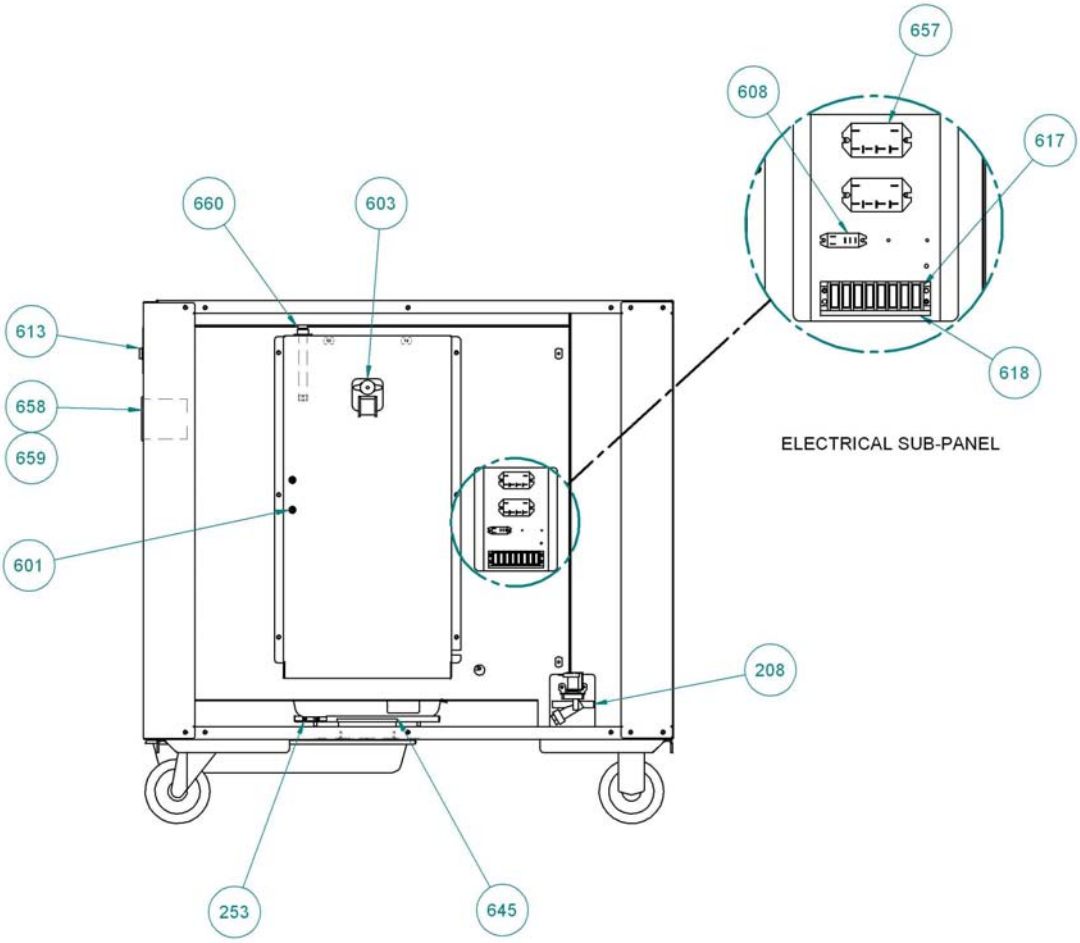

Revised 4-5-04

Oliver Packaging & Equipment Company
3236 Wison DR NW Walker MI. 49534
(800) 253-3893
www.oliverquality.com

695 PROOFER

ELECTRICAL PANEL PARTS LIST – DIGITAL CONTROLS

ITEM NO	PART DESCRIPTION	PART NUMBER
208	*SEE WATER SYSTEM LIST (PG. 11-2)*	
253	*SEE WATER SYSTEM LIST (PG. 11-2)*	
601	HEATER-TUBULAR AIR	5730-2656
603	MOTOR-FAN	0695-0025
606*	FAN-2 1/8 DIA. ALUM	5114-0010
607*	FAN-5.3 DIA ALUM	5114-0020
608	RELAY-POWER SPDT	5749-8024
613	SWITCH-ROCKER DPST	5757-3307
614*	CORD-POWER	0695-0026
615*	BUSHING-STRNRLF .27-.464 GRIP	5765-1082
617	BLOCK-TERM DBL RW 8 CIRC	5770-7451
618	STRIP-MRKR DBL RW 8 CIRC	5770-7328
619*	JUMPER-TERMINAL BLOCK	5770-7461
645	FAN-AXIAL 3000 RPM	6310-5027
646*	CORD-FAN POWER (DIGITAL)	0695-0044-001
654*	PLUG – 20A / 125V	5765-2023
657	RELAY-DPST 20A 120V COIL	5749-8027
658	COMPUTER-PROOFER ECM-2	0695-0065
659	OVERLAY-PROOFER CONTROL	5712-4025
660	SENSOR-PROBE TEMP/HUMIDITY	5712-0670

* ITEMS NOT SHOWN IN ILLUSTRATION.

FOR SERVICE PARTS CALL OLIVER PRODUCTS @ 800-253-3893

Revised 4-5-04

Oliver Packaging & Equipment Company
3236 WISON DR NW WALKER MI. 49534
(800) 253-3893
www.oliverquality.com

695 PROOFER

DOOR ASSEMBLY

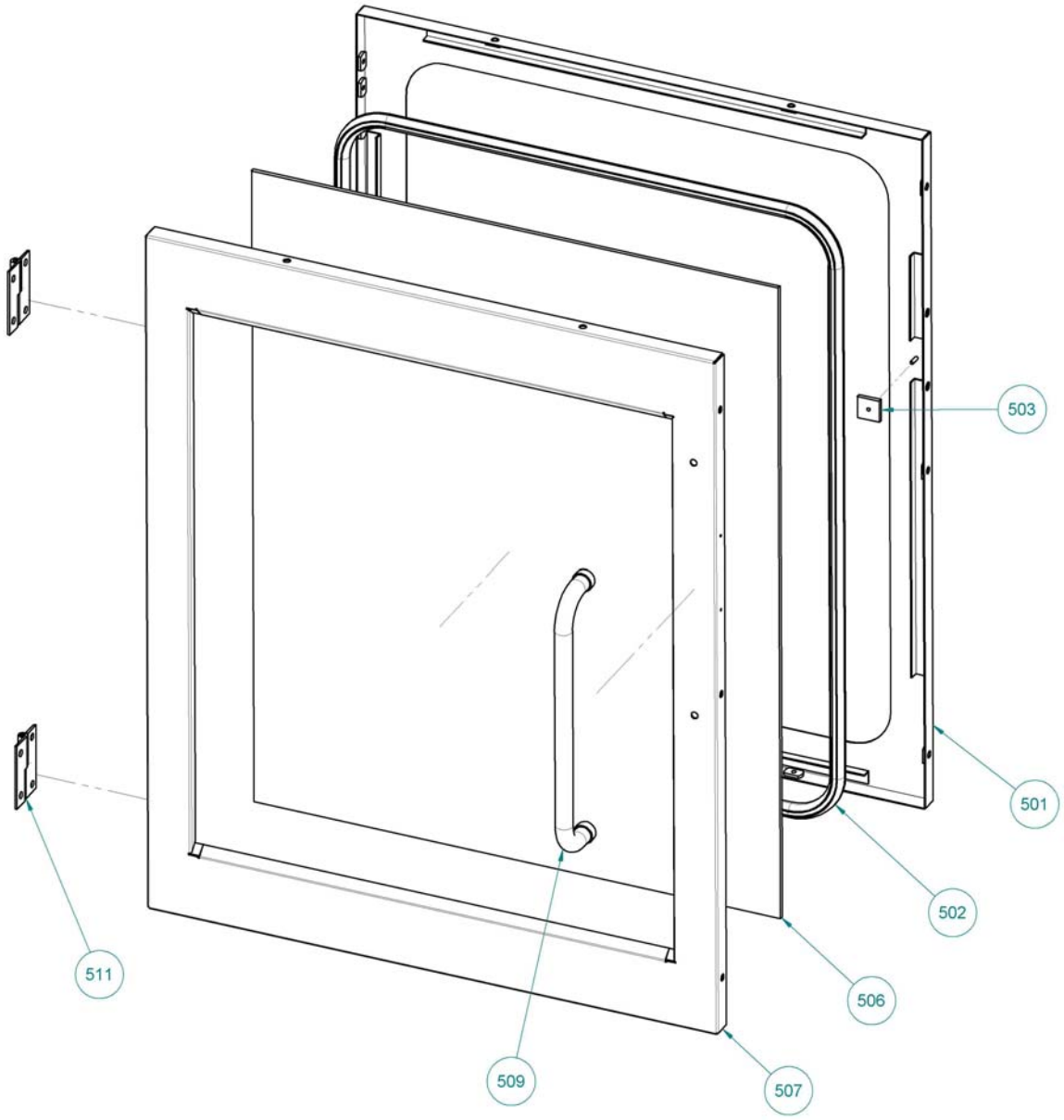

Oliver Packaging & Equipment Company
3236 WISON DR NW WALKER MI. 49534
(800) 253-3893
www.oliverquality.com

695 PROOFER

DOOR ASSEMBLY PARTS LIST

ITEM NO	PART DESCRIPTION	PART NUMBER
501	FRAME-REAR DOOR	0695-0011
502	GASKET-OVEN DOOR	6904-6062
503	PLATE-MAGNET	0695-0023
506	PANEL-LEXAN	0695-0013
507	FRAME-FRONT DOOR	0695-0012-001
509	HANDLE-STST TUBULAR	5908-5116
511	HINGE-STST SLIP	0695-0024

FOR SERVICE PARTS CALL OLIVER PRODUCTS @ 800-253-3893

Oliver Packaging & Equipment Company
3236 Wison DR NW Walker MI. 49534
(800) 253-3893
www.oliverquality.com

695 PROOFER

HOUSING/CHAMBER ASSEMBLY

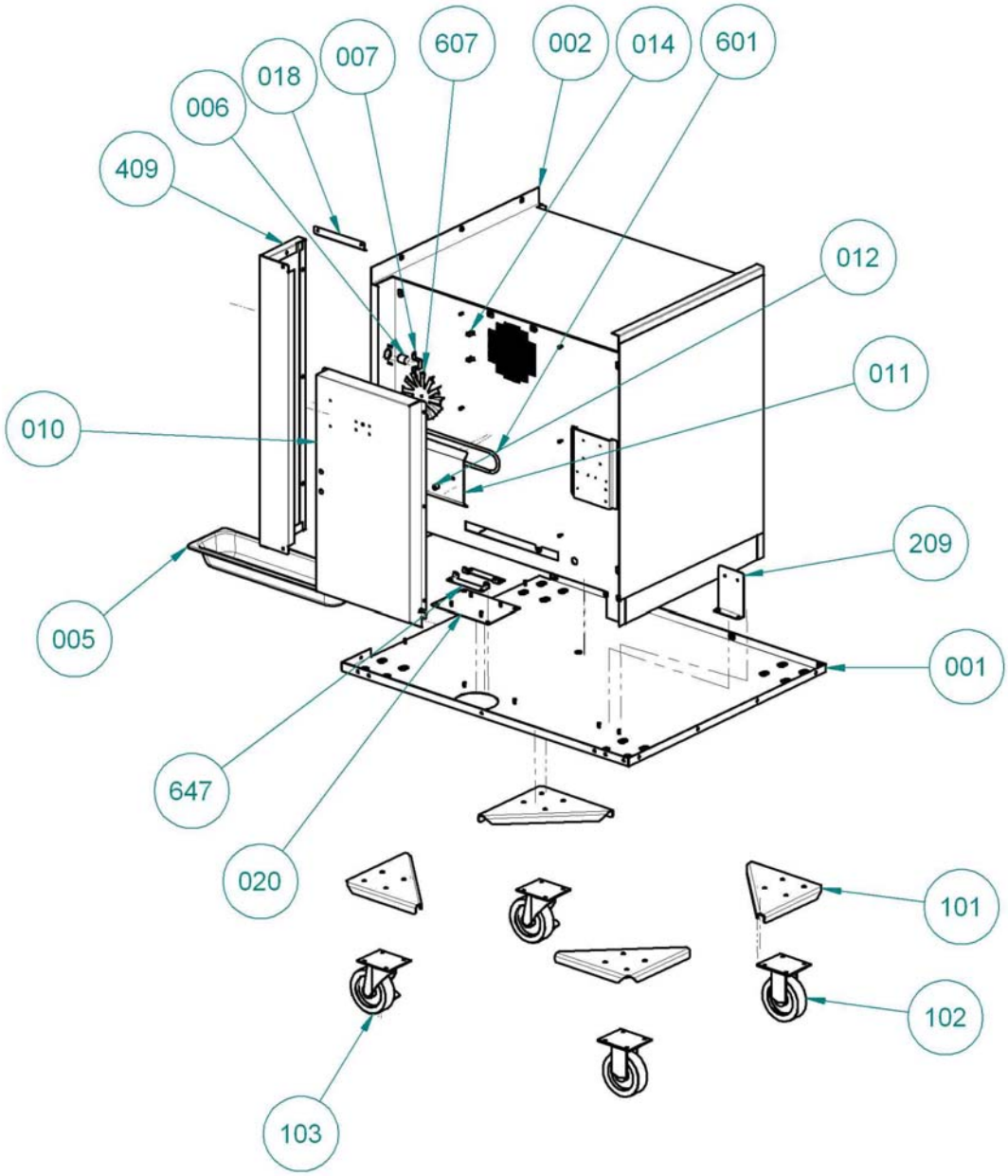

Revised 4-5-04

Oliver Packaging & Equipment Company
3236 WISON DR NW WALKER MI. 49534
(800) 253-3893
www.oliverquality.com

695 PROOFER

HOUSING/CHAMBER PARTS LIST

ITEM NO	PART DESCRIPTION	PART NUMBER
001	PANEL-BOTTOM	0695-0001-1
002	CHAMBER-INNER	0695-0002
005	PAN-20-3/4 X 6-3/8	5915-3003
006	MAGNET-PLUG	5827-3000
007	CLAMP-MAGNET	0695-0017
010	DUCT-AIR BAY MOTOR (MANUAL CONTROLS)	0695-0003
010	DUCT-AIR BAY MOTOR (DIGITAL CONTROL)	0695-0003-001
011	DEFLECTOR-HEAT	0695-0004
012	SPACER	0695-0018
014	CLIP-ADJUSTABLE	5902-9008
018	DEFLECTOR-DRIP	0695-0046
020	PLATE-FAN MOUNTING (MANUAL CONTROLS)	0695-0066
020	PLATE-FAN MOUNTING (DIGITAL CONTROL)	0695-0067
101	PLATE-CASTER	0690-0076
102	CASTER-RIGID PLATE	5902-2440
103	CASTER-SWIVEL PLATE	5902-2441
209	*SEE WATER SYSTEM LIST (PG. 11-2)*	
409	*SEE COVERS/RACKS LIST (PG. 12-2)*	
601	*SEE ELECTRICAL PANEL LIST (PG. 8-2)*	
607	*SEE ELECTRICAL PANEL LIST (PG. 8-2)*	
647	*SEE ELECTRICAL PANEL LIST (PG. 8-2)*	

FOR SERVICE PARTS CALL OLIVER PRODUCTS @ 800-253-3893

Revised 4-5-04

695 PROOFER

WATER SYSTEM ASSEMBLY

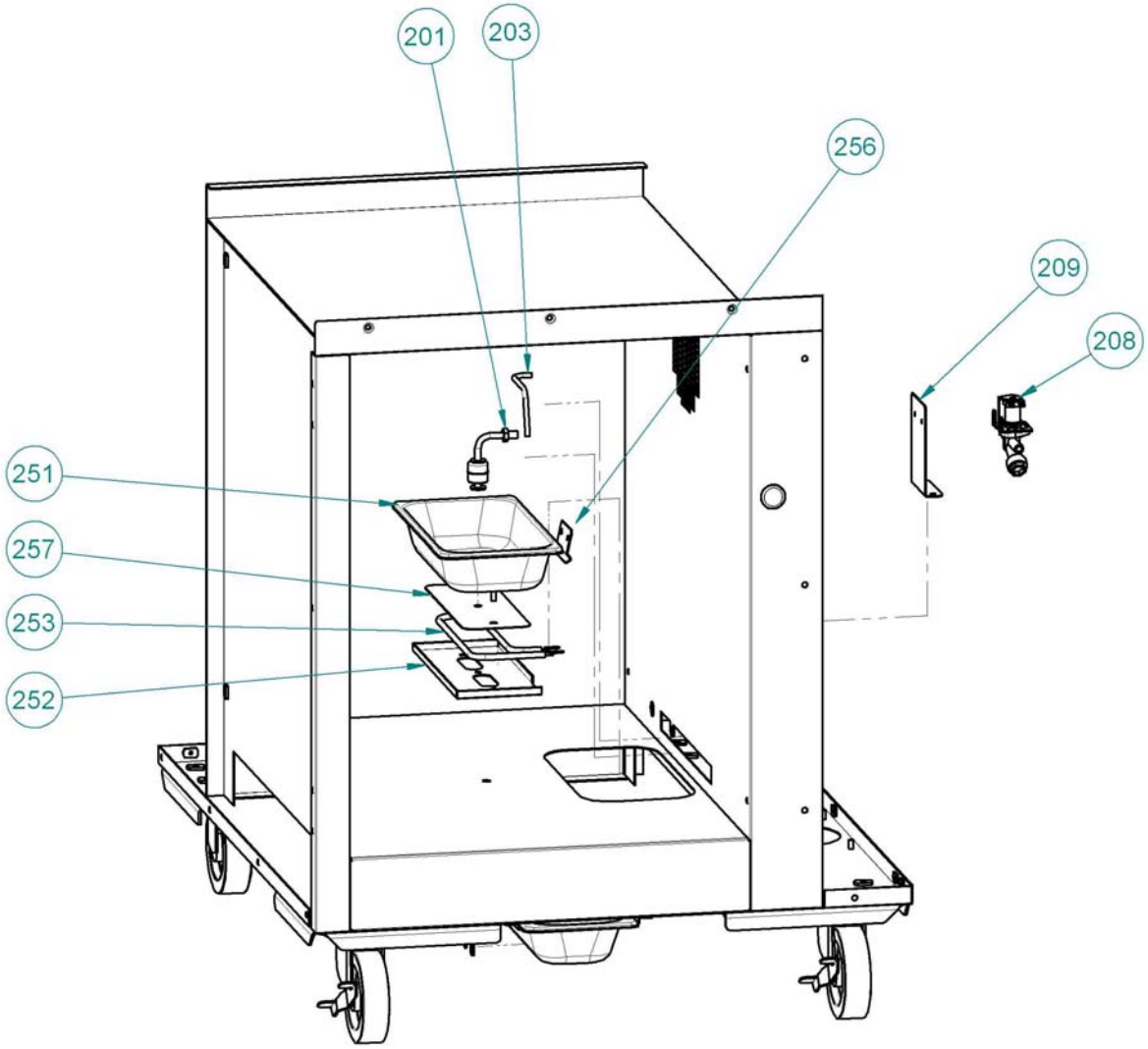

Oliver Packaging & Equipment Company
3236 WISON DR NW WALKER MI. 49534
(800) 253-3893
www.oliverquality.com

695 PROOFER

WATER SYSTEM ASSEMBLY PARTS LIST

ITEM NO	PART DESCRIPTION	PART NUMBER
201	SWITCH-FLOAT	0695-0019
203	TUBE-FILL	0695-0045
204*	CONNECTOR-MALE	5115-2744
205*	ANCHOR-COUPLING	5115-1582
206*	MALE CONNECTOR	5115-6261
207*	TUBING-POLYETHYLENE	6528-6620
208	VALVE-WATER SOLENOID	5148-6770
209	BRACKET-WATER VALVE	0695-0020
210*	FITTING-FEMALE CONNECTOR	5115-6231
218*	VALVE-NEEDLE	5148-5784
251	TRAY-WATER	0695-0014
252	COVER-HEATER	0695-0015
253	HEATER-TUBULAR WATER	5730-2657
256	CLAMP	0695-0016
257	PLATE-HEATER INTERFACE	0695-0068

* ITEMS NOT SHOWN IN ILLUSTRATION.

FOR SERVICE PARTS CALL OLIVER PRODUCTS @ 800-253-3893

Oliver Packaging & Equipment Company
3236 WISON DR NW WALKER MI. 49534
(800) 253-3893
www.oliverquality.com

695 PROOFER

COVERS / RACKS ASSEMBLY

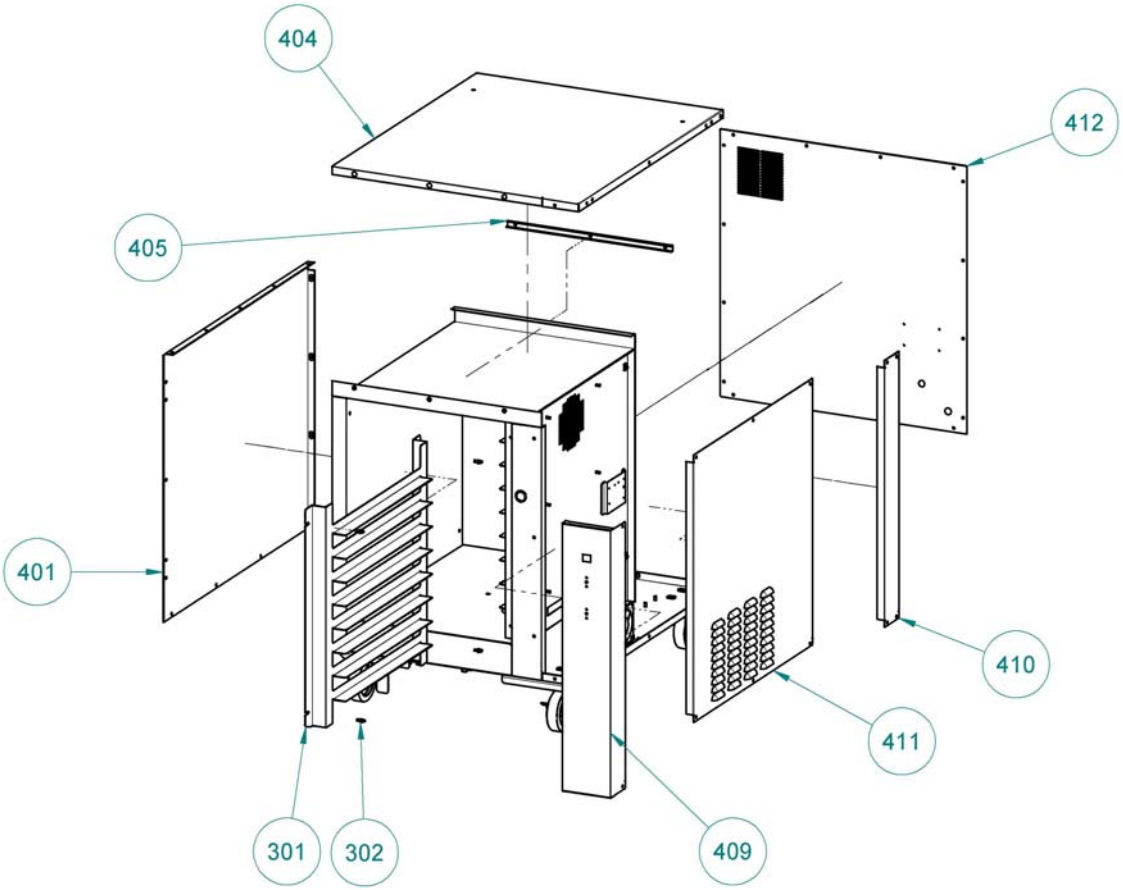

Oliver Packaging & Equipment Company
3236 WISON DR NW WALKER MI. 49534
(800) 253-3893
www.oliverquality.com

695 PROOFER

COVERS / RACKS ASSEMBLY PARTS LIST

ITEM NO	PART DESCRIPTION	PART NUMBER
301	RACK-8 SHELF	0695-0021
302	SCREW-THUMB	5843-0536
401	COVER-LH SIDE	0695-0005
404	COVER-TOP	0695-0006-1
405	CHANNEL-NUT	0695-0022
409	COVER-FRONT (MANUAL CONTROLS)	0695-0007-1
409	COVER-FRONT (DIGITAL CONTROLS)	0695-0007-001
410	COVER-RH SIDE REAR	0695-0008
411	PANEL-ACCESS (MANUAL CONTROLS)	0695-0009
411	PANEL-ACCESS (DIGITAL CONTROL)	0695-0009-001
412	PANEL-REAR	0695-0010

FOR SERVICE PARTS CALL OLIVER PRODUCTS @ 800-253-3893

Revised 4-5-04

Oliver Packaging & Equipment Company
3236 WISON DR NW WALKER MI. 49534
(800) 253-3893
www.oliverquality.com

695 PROOFER

115V WIRING DIAGRAM – MANUAL CONTROLS #0695C12000

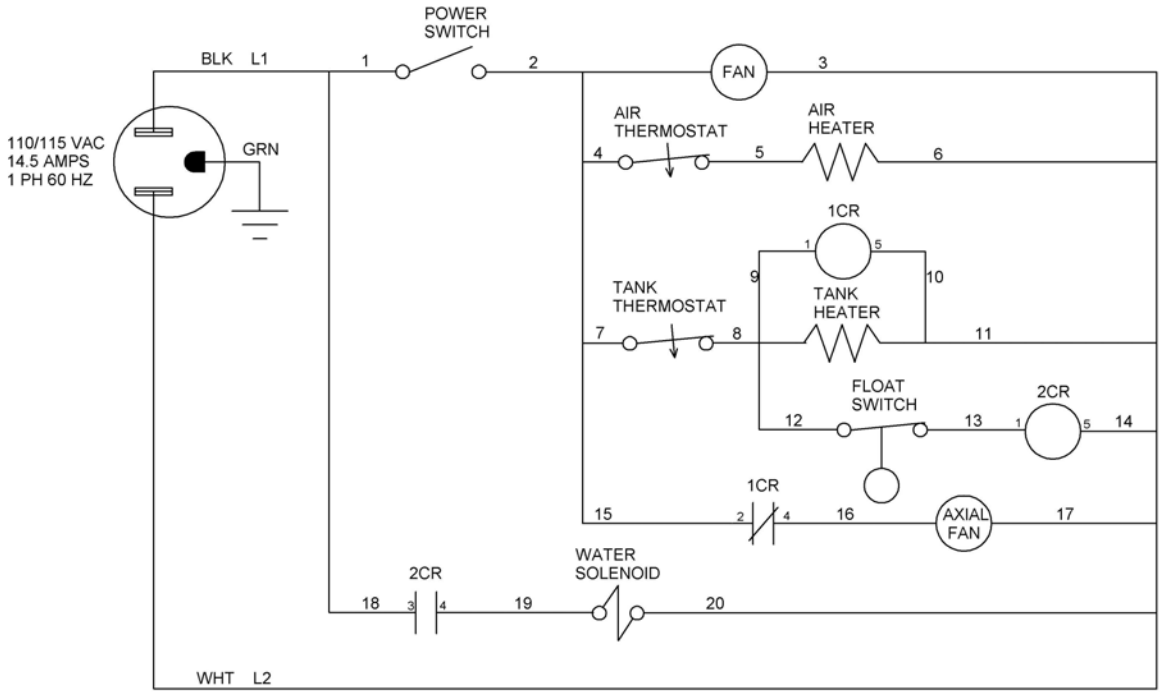

Revised 8-14-03

Oliver Packaging & Equipment Company
3236 Wison DR NW Walker MI. 49534
(800) 253-3893
www.oliverquality.com

695 PROOFER

115V WIRING DIAGRAM – DIGITAL CONTROLS #0695C12001

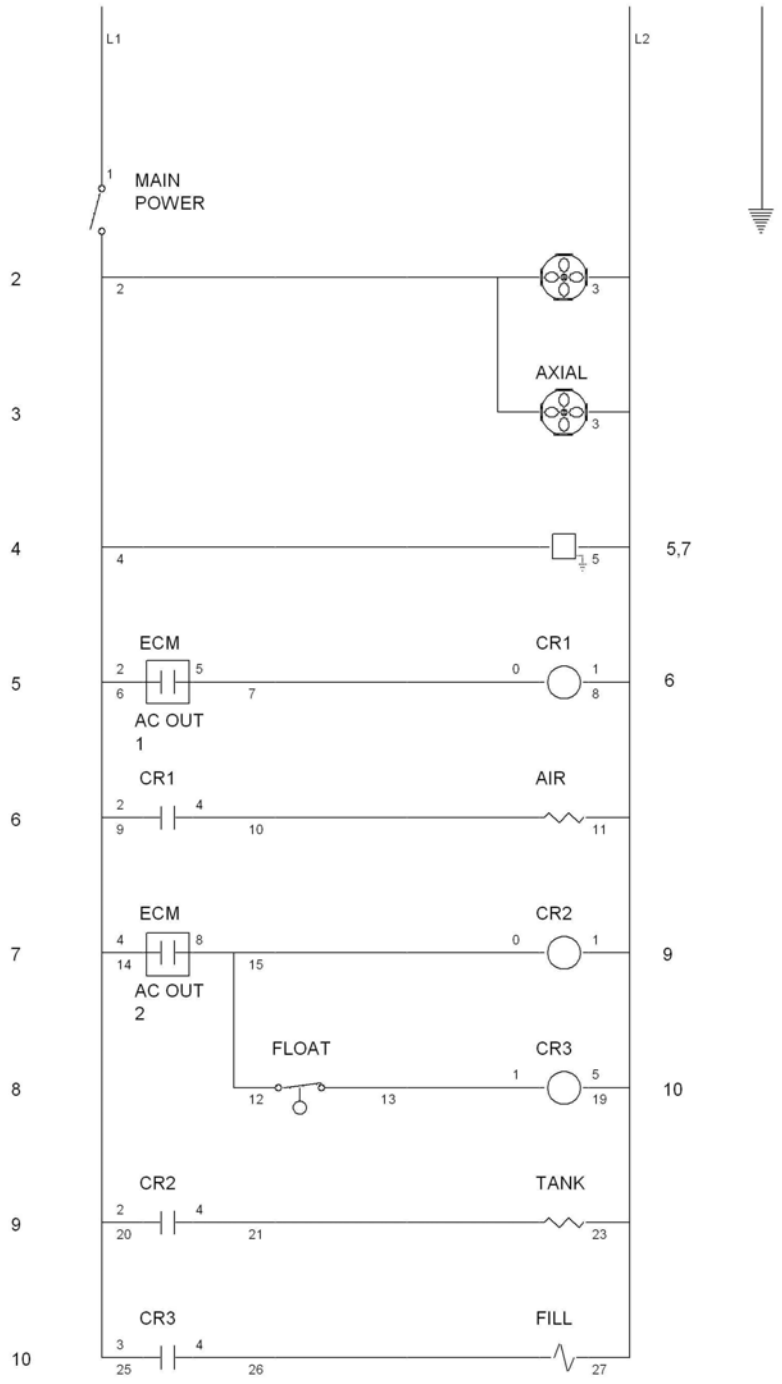

Revised 4-5-04

Oliver Packaging & Equipment Company
3236 WISON DR NW WALKER MI. 49534
(800) 253-3893
www.oliverquality.com

WARRANTY

PARTS
Oliver Packaging & Equipment Company warrants that if any part of the equipment (other than a part not manufactured by Oliver Packaging & Equipment) proves to be defective (as defined below) within one year after shipment, and if Buyer returns the defective part to Oliver Packaging & Equipment within one year, Freight Prepaid to Oliver Packaging & Equipment plant in Grand Rapids, MI, then Oliver Packaging & Equipment , shall, at Oliver Packaging & Equipment option, either repair or replace the defective part, at Oliver Packaging & Equipment expense.

LABOR
Oliver further warrants that equipment properly installed in accordance with our special instructions, which proves to be defective in material or workmanship under normal use within one (1) year from installation or one (1) year and three (3) months from actual shipment date, whichever date comes first, will be repaired by Oliver Packaging & Equipment or an Oliver Packaging & Equipment Authorized Service Dealer, in accordance with Oliver Packaging & Equipment published Service Schedule.

For purposes of this warranty, a defective part or defective equipment is a part or equipment which is found by Oliver Packaging & Equipment to have been defective in materials workmanship, if the defect materially impairs the value of the equipment to Buyer. Oliver Packaging & Equipment has no obligation as to parts or components not manufactured by Oliver Packaging & Equipment, but Oliver Packaging & Equipment assigns to Buyer any warranties made to Oliver Packaging & Equipment by the manufacturer thereof.

This warranty **does not** apply to:
1. Damage caused by shipping or accident.
2. Damage resulting from improper installation or alteration.
3. Equipment misused, abused, altered, not maintained on a regular basis, operated carelessly, or used in abnormal conditions.
4. Equipment used in conjunction with products of other manufacturers unless such use is approved by Oliver Packaging & Equipment Company in writing.
5. Periodic maintenance of equipment, including but not limited to lubrication, replacement of wear items, and other adjustments required due to installation, set up, or normal wear.
6. Losses or damage resulting from malfunction.

The foregoing warranty is in lieu of all other warranties expressed or implied AND OLIVER PACKAGING & EQUIPMENT COMPANY MAKES NO WARRANTY OF MERCHANTABILITY OR FITNESS FOR PURPOSE REGARDING THE EQUIPMENT COVERED BY THIS WARRANTY. Oliver Packaging & Equipment Company neither assumes nor authorizes any person to assume for it any other obligations or liability in connection with said equipment. OLIVER PACKAGING & EQUIPMENT COMPANY SHALL NOT BE LIABLE FOR LOSS OF TIME, INCONVENIENCE, COMMERCIAL LOSS, INCIDENTAL OR CONSEQUENTIAL DAMAGES.

THIS PAGE WAS INTENTIONALLY
LEFT BLANK.

Oliver Packaging & Equipment Company
3236 Wison DR NW Walker MI. 49534
(800) 253-3893
www.oliverquality.com

WARRANTY PROCEDURE

1. If a problem should occur, either the dealer or the end user must contact the Parts and Service Department and explain the problem.

2. The Parts and Service Manager will determine if the warranty will apply to this particular problem.

3. If the Parts and Service Manager approves, a Work Authorization Number will be generated, and the appropriate service agency will perform the service.

4. The service dealer will then complete an invoice and send it to the Parts and Service Department at Oliver Packaging & Equipment Company.

5. The Parts and Service Manager of Oliver Packaging and Equipment Company will review the invoice and returned parts, if applicable, and approve for payment.

THIS PAGE WAS INTENTIONALLY
LEFT BLANK.

Oliver Packaging & Equipment Company
3236 WISON DR NW WALKER MI. 49534
(800) 253-3893
www.oliverquality.com

RETURNED PARTS POLICY

This policy applies to all parts returned to the factory whether for warranted credit, replacement, repair or re-stocking.

Oliver Packaging and Equipment Company requires that the customer obtain a Return Material Authorization (RMA) number before returning any part. This number should appear on the shipping label and inside the shipping carton as well. All parts are to be returned prepaid**.** Following this procedure will insure prompt handling of all returned parts.

To obtain an RMA number contact the Repair Parts Deptartment toll free at (800) 253-3893.

Parts returned for re-stocking are subject to a **RE-STOCKING CHARGE**.

Thank you for your cooperation,

Repair Parts Manager
Oliver Packaging and Equipment Company